MINI-ESTATES FENCE

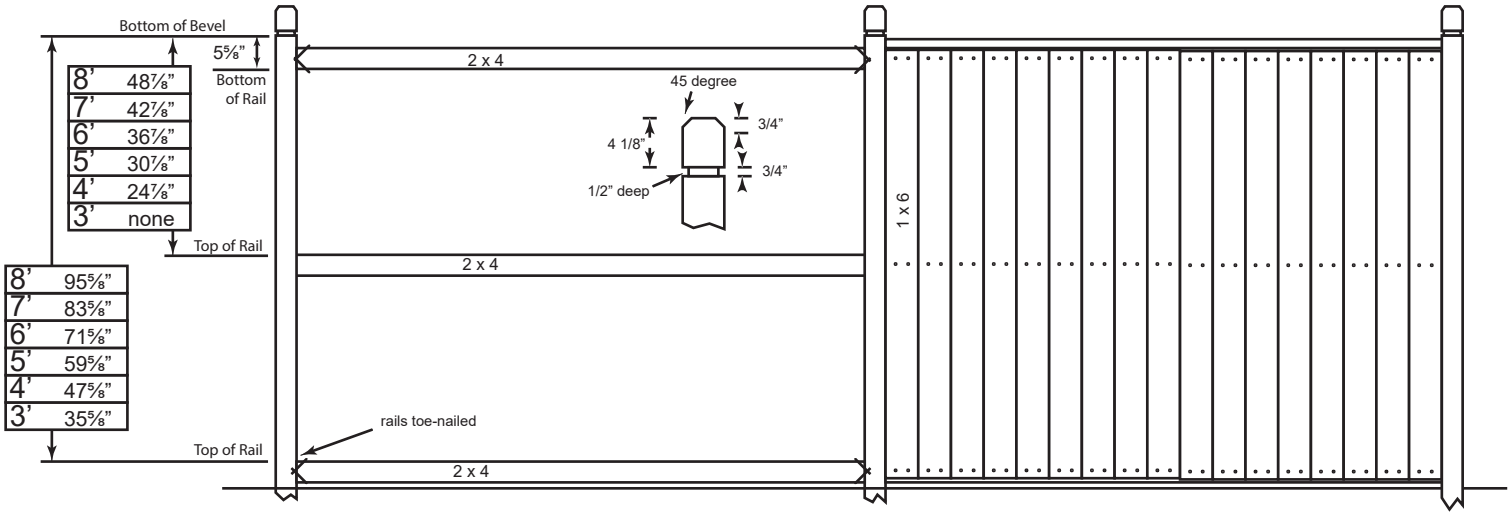

8'	48⅞"
7'	42⅞"
6'	36⅞"
5'	30⅞"
4'	24⅞"
3'	none

8'	95⅝"
7'	83⅝"
6'	71⅝"
5'	59⅝"
4'	47⅝"
3'	35⅝"

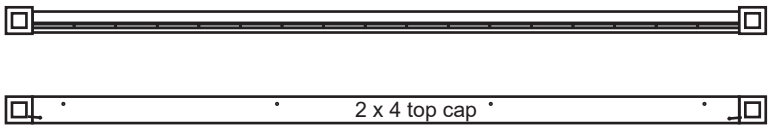

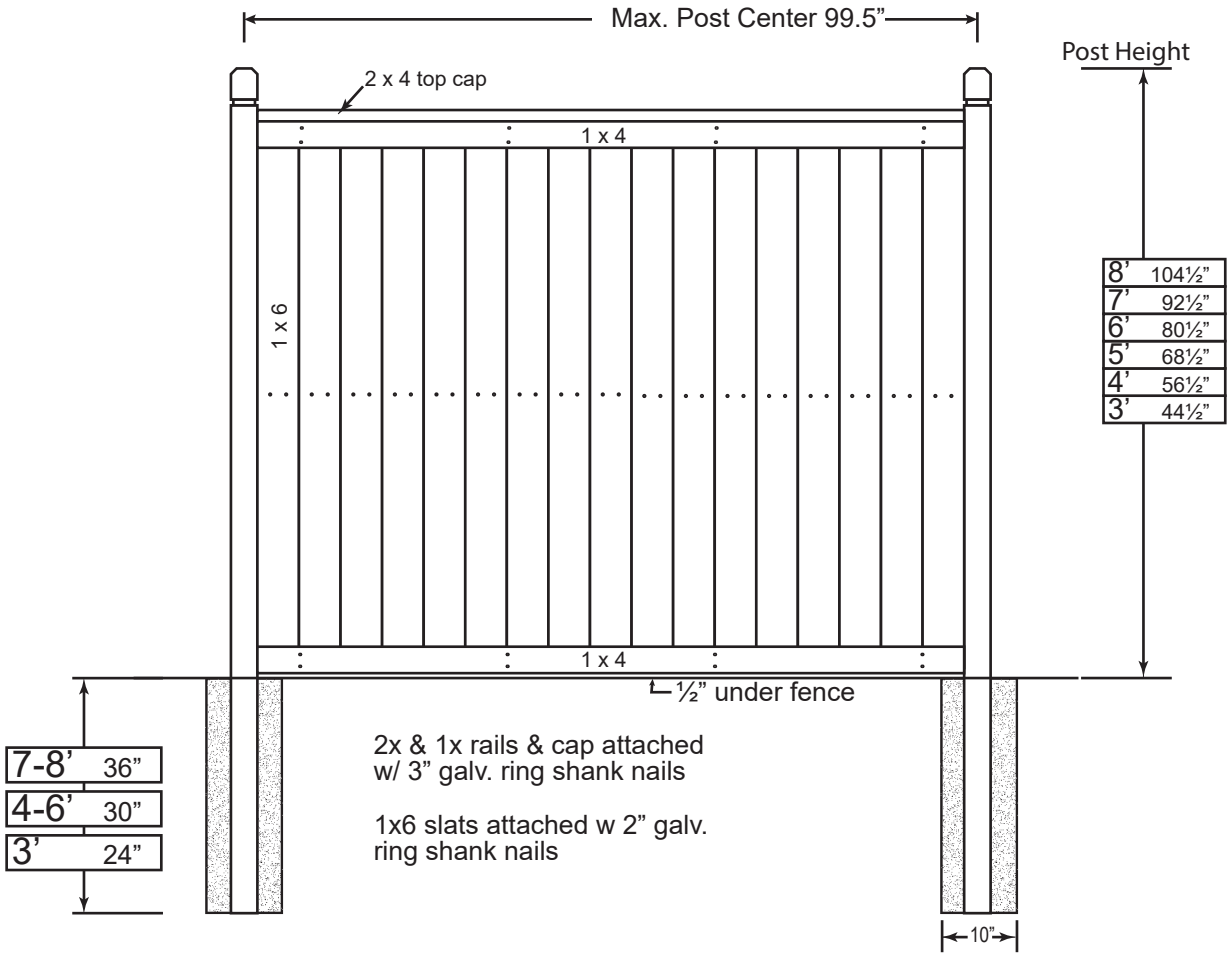

8'	104½"
7'	92½"
6'	80½"
5'	68½"
4'	56½"
3'	44½"

7-8'	36"
4-6'	30"
3'	24"

FENCES & DECKS
www.fenceanddeckutah.com
SLC 801-990-6888
PROVO 801-374-6428